ANN ARBOR RAILROAD

Steel Caboose Paint Schemes



Craig Wilson

in cooperation with the Ann Arbor Railroad Technical & Historical Association

June 2022

Seventeen steel cabooses were built in two groups for the Ann Arbor Railroad following a design developed by the Wabash Railroad.

2830 - 2839 were built at the Wabash shops, Decatur Illinois in 1952.

2840 - 2846 were built by International Car Company in 1955 along with ten cabooses for the Wabash RR. These followed the same design as the 1952 Wabash-built cabooses.

There seems to be only one small structural difference between the cabooses built by the Wabash RR and those built by International Car Company. It is the trim piece at the edge of the roof that extends over the end platforms.

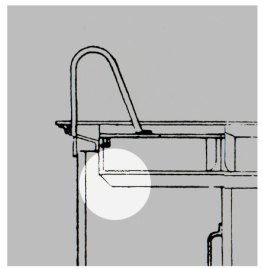

2830-2839 (Wabash built)
the trim piece is cut on a 45 degree angle

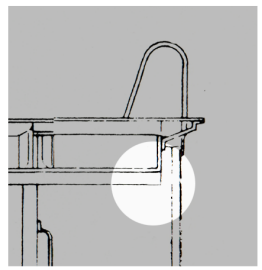

2840-2846 (International Car Co built)
the trim piece is squared off

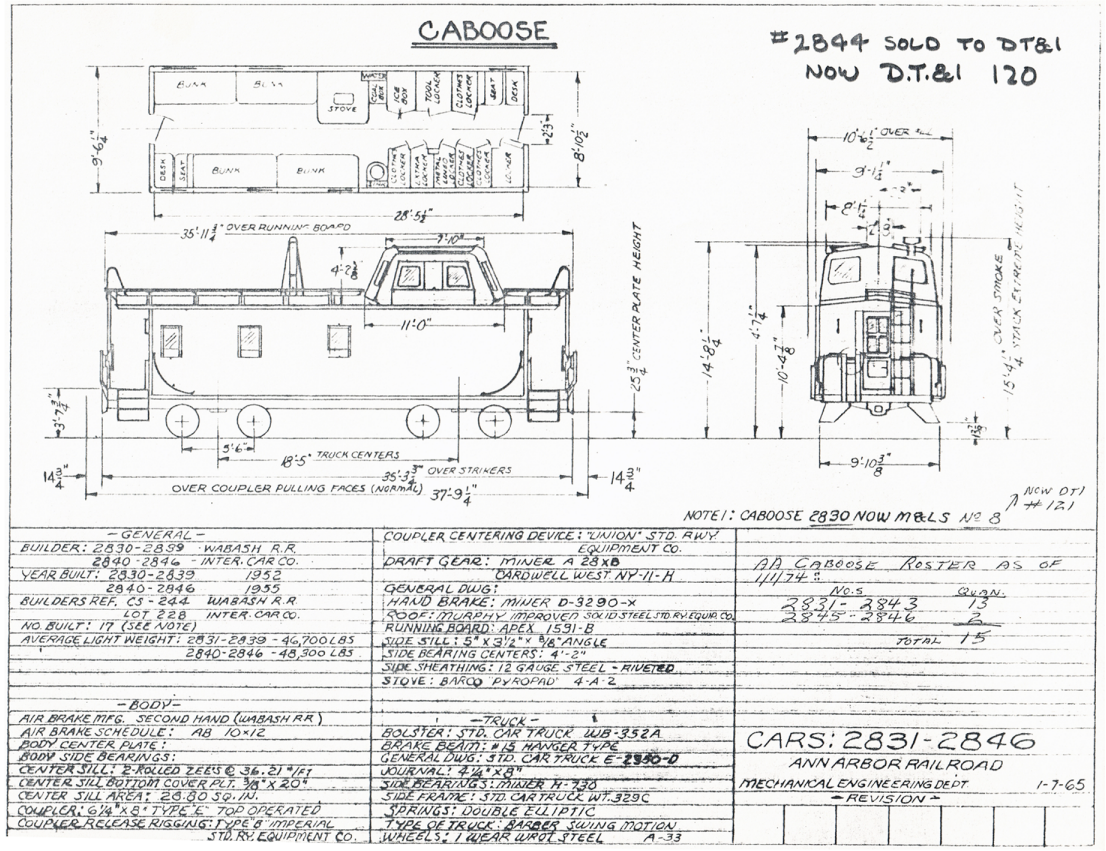

The page that was included in the Ann Arbor Equipment Books. The end doors depict what was used on the Wabash cabooses. The AA versions had a steel door with a smaller sealed window.

Roof: *Murphy Improved Solid Steel (Std Ry Equip Co).* The earliest Wabash cabooses built to this design had a roof with all rectangular roof panels. By 1952 it was changed to the "Improved" version that utilized three diagonal panels and one rectangular panel where the smokejack was located.

ANN ARBOR RAILROAD caboose paint schemes

Paint specifications - provided by Bob Warrick

WABASH ERA
Red: Coroc Sunfast Enamel #801, Cook Paint and Varnish Company

DT&I ERA
Red: Dupont Imron #85U
Yellow: Dupont Imron #5248U

MICHIGAN INTERSTATE ERA
Orange: Allis-Chalmers #921092 Persian Orange

There is some debate over whether the roof was unpainted galvanized metal or was actually painted a silver color. The Wabash Railroad is known to have painted the roof black on some cabooses to reduce glare. And standard DT&I practice was to paint caboose roofs black.

ANN ARBOR RAILROAD caboose paint schemes

As-built scheme (2830-2839, blt Wabash RR 1952)

Red: sides, ends, cupola and ladders
Tuscan Red: steps, end platforms truck sideframes and underbody (Wabash RR practice)
Yellow: side and end railings, grab irons, outer portion of end platform railings
Silver (aluminum): roof, running board and window frames (note: cupola roof is red)
Black: smoke jack
Note: delivered without pennant heralds - added by the railroad after delivery

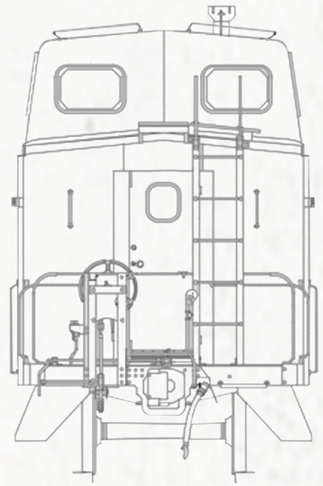

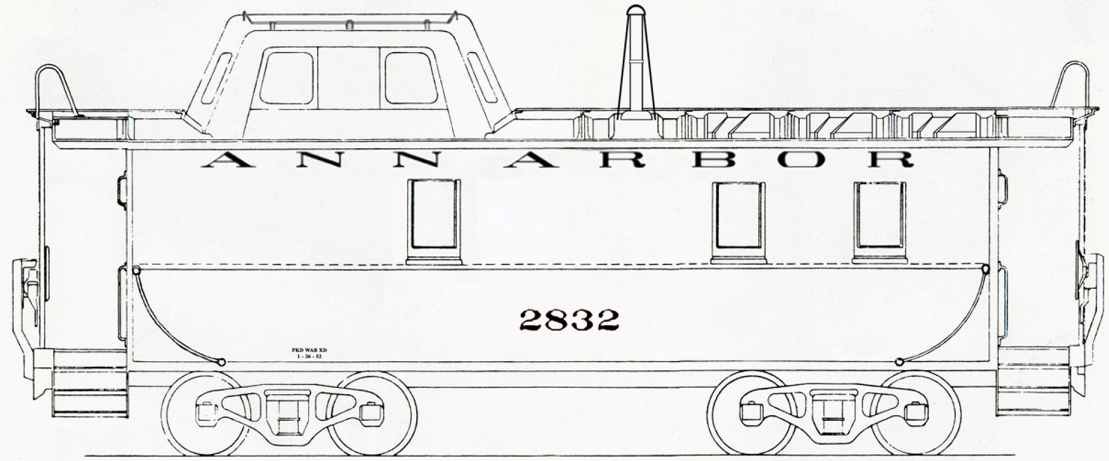

Reference: Allen Blacklock photo of AA 2832, 2837, 2838 at Boat Landing 1952



2832, 2837, 2838

Boat Landing, 1952

Allen Blacklock photo from the collection of Arnt Gerritsen

ANN ARBOR RAILROAD caboose paint schemes
1950's to early 1960's Wabash-era

Red: sides, ends, cupola and ladders
Tuscan Red: steps, end platforms truck sideframes and underbody (Wabash RR practice)
note: steps and end platforms red body color when cabooses were repainted
Yellow: side and end railings, grab irons, outer portion of end platform railings (ladder tops on some)
Silver (aluminum): roof, running board (note: cupola roof is red)
Pennant heralds applied after delivery - outline pennants first - solid pennants used later

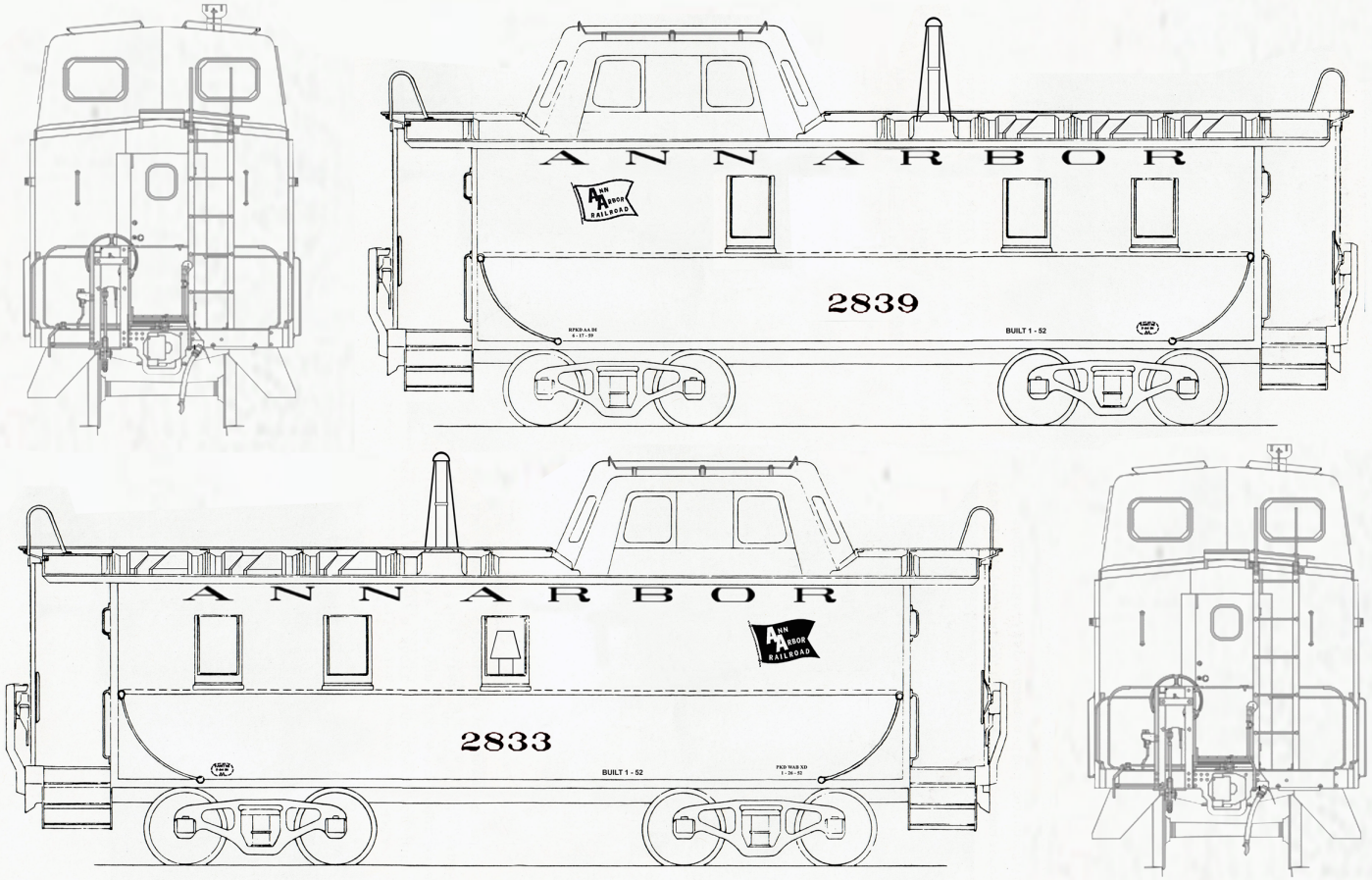

Jerry Pinkepank photo of AA 2839 dated 1961 / undated photo of AA of AA 2833
John Ingles photo at Owosso dated May 1959 shows 10 cabooses, all with outline pennants



2842
Outline Pennant Herald
1959
John Ingles photo

2833
Solid Pennant Herald
May 1964
photographer unknown

note: on this repaint, the steps are the same red as the body color and both the tops of the ladders and the ladder rungs are yellow



ANN ARBOR RAILROAD caboose paint schemes
One-of-a-kind DT&I-era scheme

AA 2835 was the only caboose to have this scheme It is stenciled 'PAINTED6-67" and "JN" (for the DT&I shop at Jackson Ohio). A photo dated May 1966 taken at the Owosso Yard shows two AA cabooses in the scheme with yellow ends, the smaller compass herald and no white stripe so this is not the first DT&I-era scheme. In 1974 this caboose was repainted into the then-standard scheme of red body with yellow ends, no herald and gothic-type number.

Red: body, ends, steps and cupola
Yellow: grab irons, side and end railings
Silver (aluminum): roof, running board (note: cupola roof is red)
48-inch diameter compass herald
3-inch white stripe

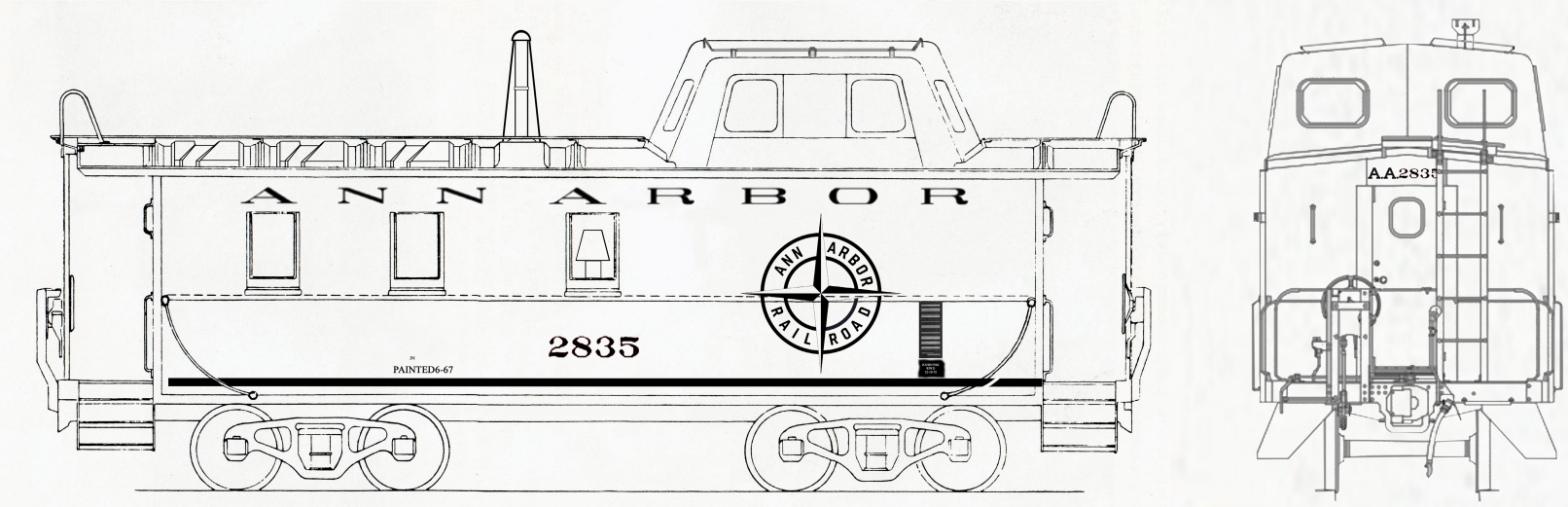

Dennis Schmidt photo dated November 9, 1973



2835
Owosso Shop, November 1973
Dennis Schmidt photo

2835
Ottawa Yard
Toledo Ohio, 1973
Brian Everett collection



ANN ARBOR RAILROAD caboose paint schemes
Standard DT&I-era scheme

Red: body (including corner posts) and cupola
Yellow: ends, steps, platforms, end ladders (including top grabs), side railings
Silver (aluminum): roof, running board (note: cupola roof is red)
36 - inch diameter compass herald

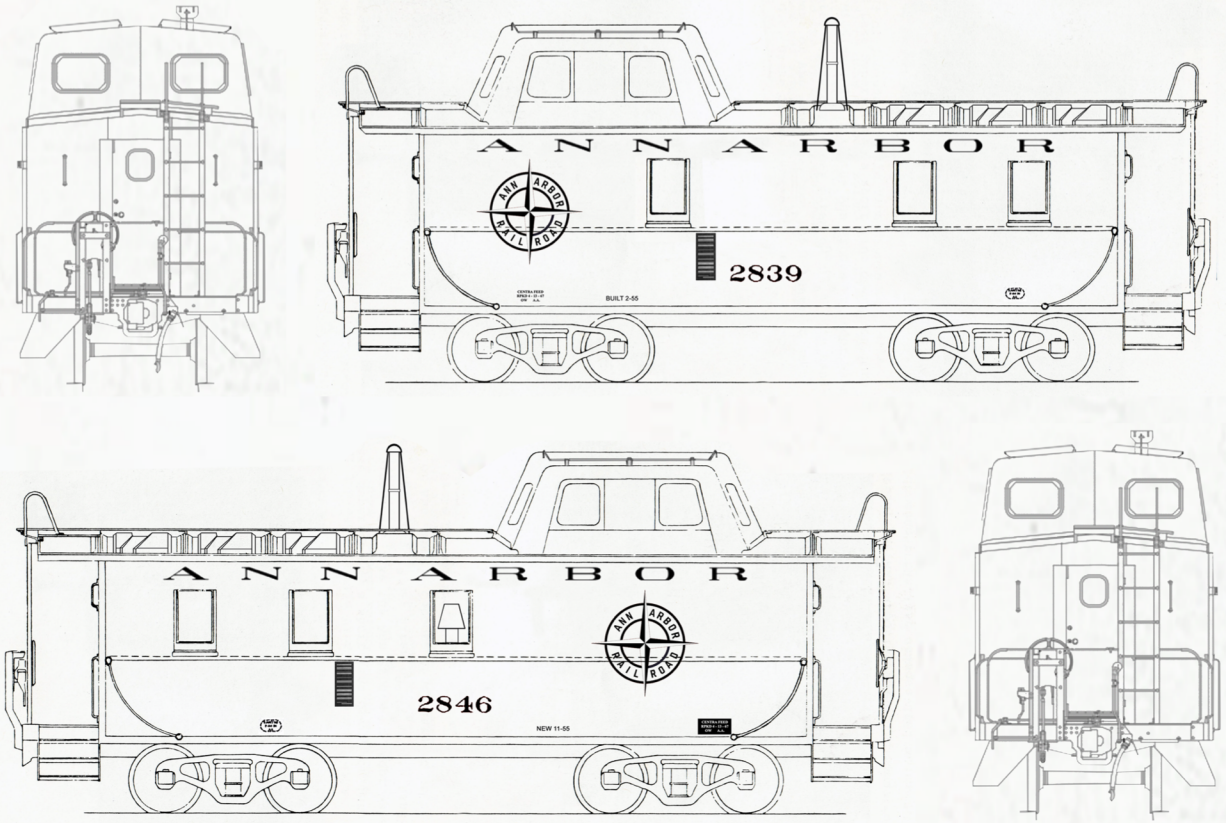

Undated photo of AA 2839 / Dennis Schmidt photo of AA 2846 dated July 1973
Note: 2839 stencilled with incorrect 1955 Blt date per prototype photo



2838
Alma Michigan, July 1968
Dennis Schmidt photo

2846
Owosso Yard, July 1973
Dennis Schmidt photo





2838

Owosso Yard February 17, 1968
Dennis Schmidt photo

During the Viet Nam war someone showed their
support of the US Army Rangers on caboose 2838

ANN ARBOR RAILROAD caboose paint schemes

DT&I-era variations 1

In the late 1960's cabooses began to be repainted without any heralds - at first using RR Roman-style number

Red: body (including corner posts) and cupola
Yellow: ends, steps, platforms, end ladders (including top grabs), side railings
Silver (aluminum): roof, running board (note: cupola roof is red)
No herald - RR Roman style number

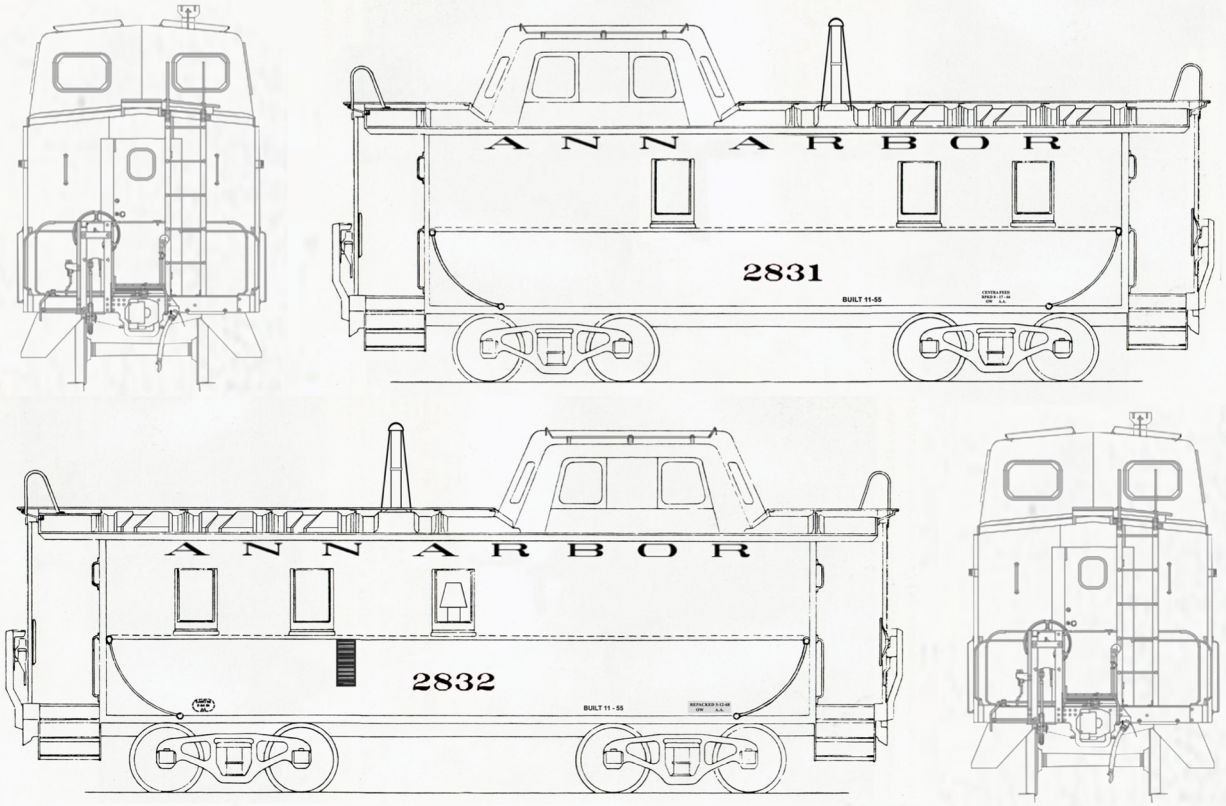

Dennis Schmidt photo of AA 2831 at Owosso dated March 1968 / Undated photo of AA 2832 at Owosso
Note: both cabooses stencilled with incorrect 1955 Blt date per prototype photos
AA 2832 was never repainted orange but kept this paint scheme until the end



2831
Owosso Yard, March 1968
Dennis Schmidt photo

2832
Ferry Yard, Ann Arbor
October 1980
Jim Sinclair photo



ANN ARBOR RAILROAD caboose paint schemes
DT&I-era variations 2

Cabooses repainted without any heralds and number in a Gothic-style font

Red: body (including corner posts) and cupola
Yellow: ends, steps, platforms, end ladders (including top grabs), side railings
Silver (aluminum): roof, running board (note: cupola roof is red)

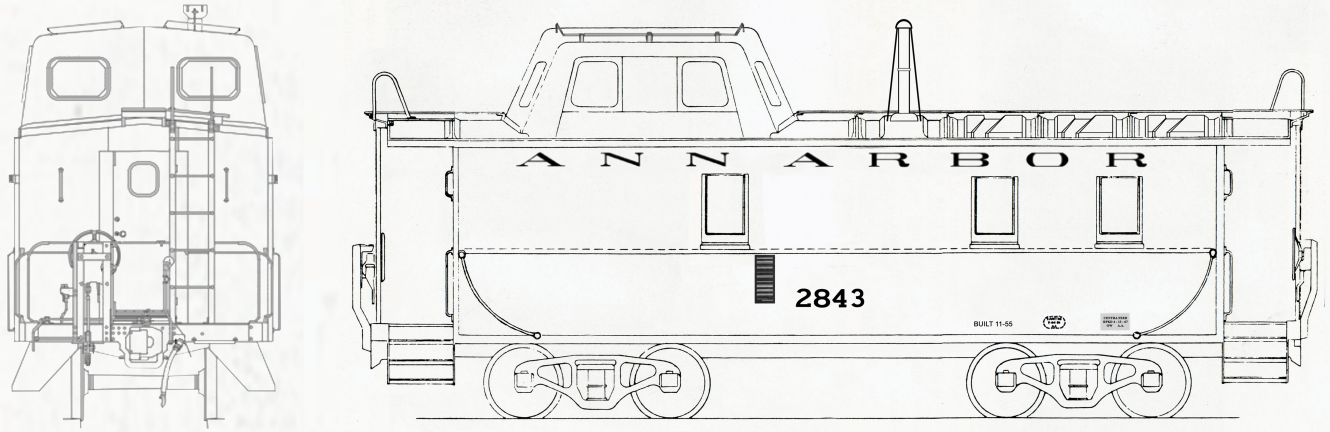

Photo of AA 2843 at Ferry Yard dated February 1977 - no COTS - repack stencil

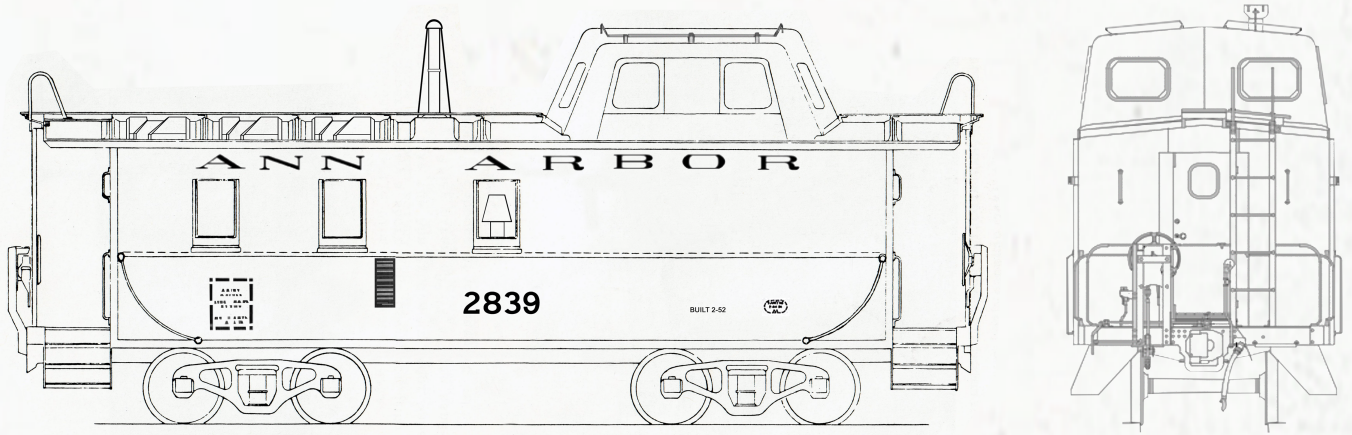

Photo of AA 2839 at Owosso dated October 1975 - single panel COTS painted in white on red carbody
Note: the “ANN ARBOR” name is narrower than usual

ANN ARBOR RAILROAD caboose paint schemes

DT&I-era variations 2

Cabooses repainted without any heralds and number in a Gothic-style font

Red: body (including corner posts) and cupola
Yellow: ends, steps, platforms, end ladders (including top grabs), side railings
Silver (aluminum): roof, running board (note: cupola roof is red)

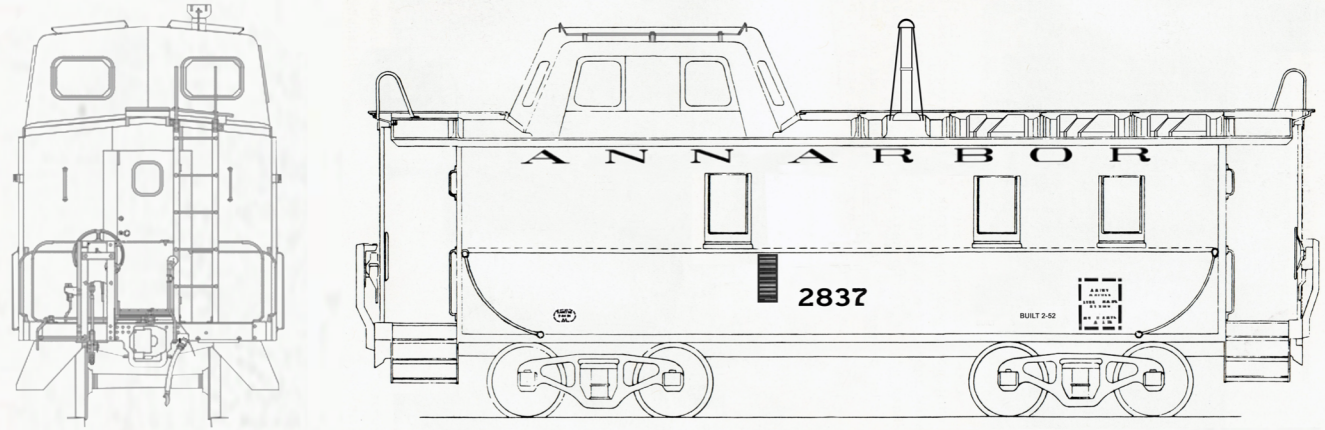

Photo of AA 2837 at Selma Yard dated August 1974 - single panel COTS painted in yellow on red carbody

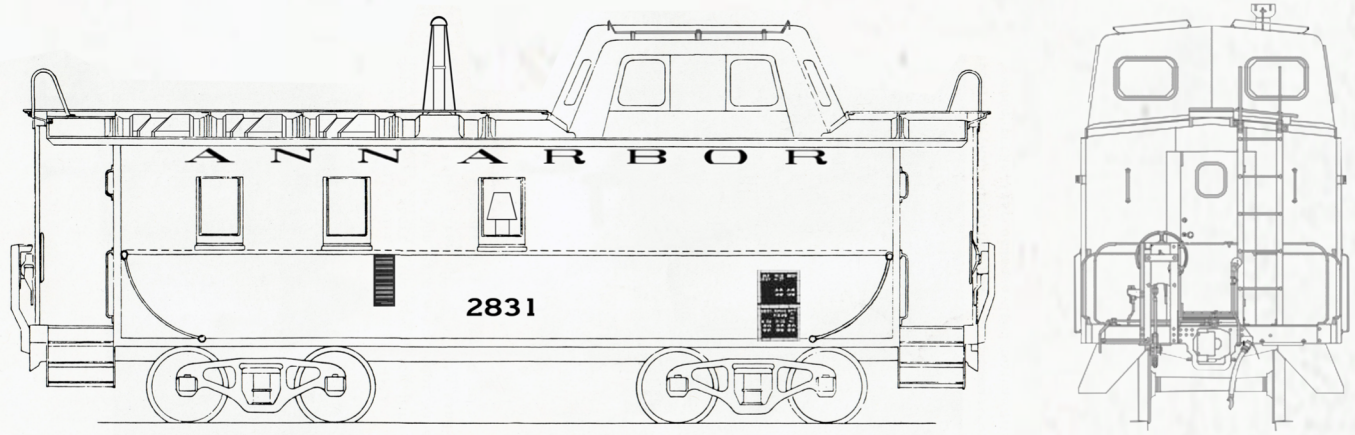

Photo of AA 2831 at Owosso dated April 1976 - two panel COTS - white on black



2841
Owosso Yard, August 1972
Dennis Schmidt photo

2835
Ottawa Yard, Toledo Ohio
June 1974
Doug Leffler photo

A Dennis Schmidt photo dated November 1973 shows this caboose in the paint scheme with the large compass herald. Seven months later it has been repainted with no herald. This is proof that 2835 never had the standard DT&I-era paint scheme with the 36-inch compass herald.





2837
Owosso Yard

2831
Owosso Yard, April 1976



ANN ARBOR RAILROAD caboose paint schemes

Variation 3

The last red / yellow end repaint - AA 2834 only

Red: body (including corner posts) and cupola
Yellow: ends, steps, platforms, end ladders (including top grabs), side railings
Silver (aluminum): roof, running board (note: cupola roof is red)

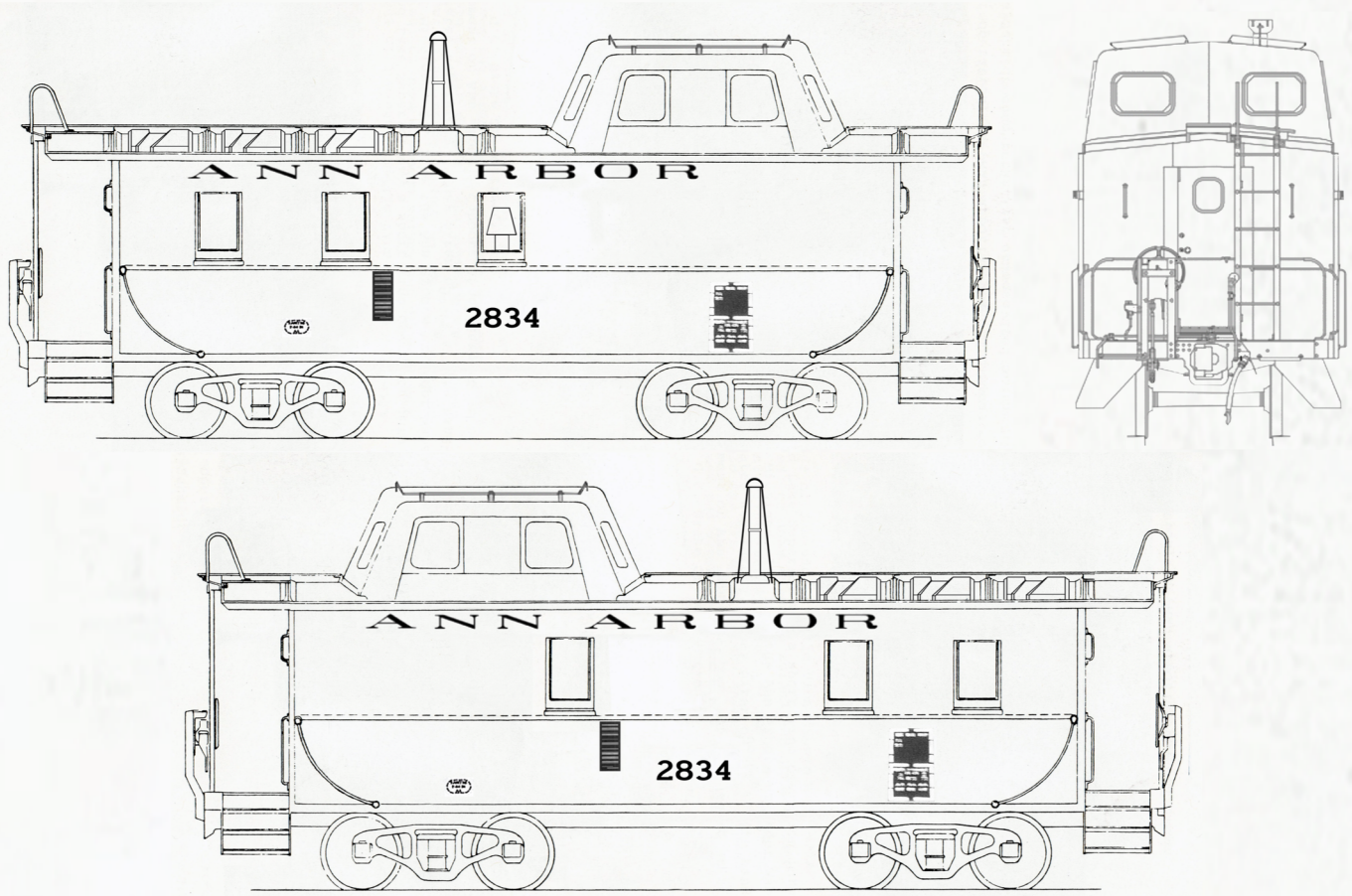

Note the close spacing of the “ANN ARBOR” name
Gothic-style number font - two panel COTS - white on black
Photo of AA 2834 at Boon dated October 1977 and Mesick dated December 1977



2834
Boon, October 1977

It still has a screen door!



2834
Manistee River bridge
Mesick, December 1977

ANN ARBOR RAILROAD caboose paint schemes
Michigan Interstate “ann arbor railroad system”

Orange: body, ends, steps, platforms and cupola
Note: railings and grab irons are not a contrasting color
All cabooses except 2832 were repainted in some variation of this scheme

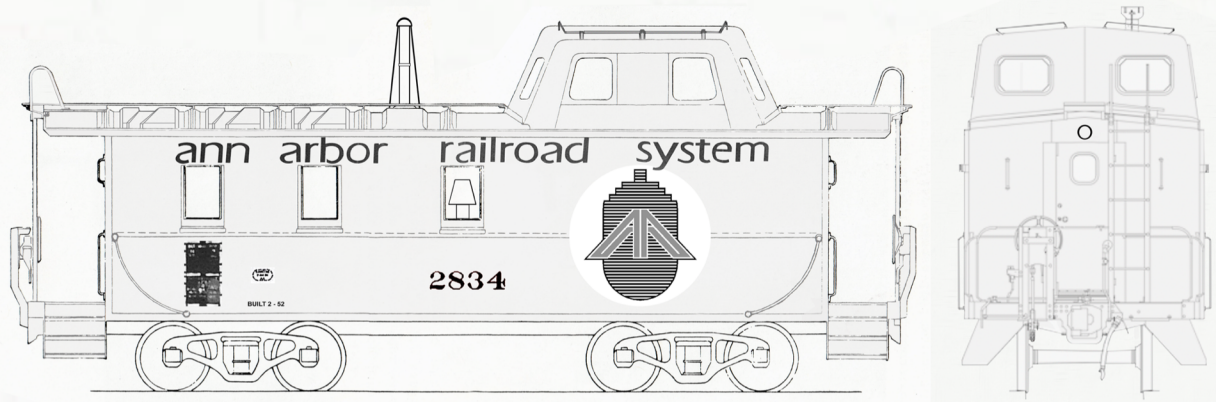

Photo of AA 2834 dated May 1986 - most cabooses in this scheme used the RR Roman font number
Early repaints had “ann arbor railroad system” lettering evenly spaced

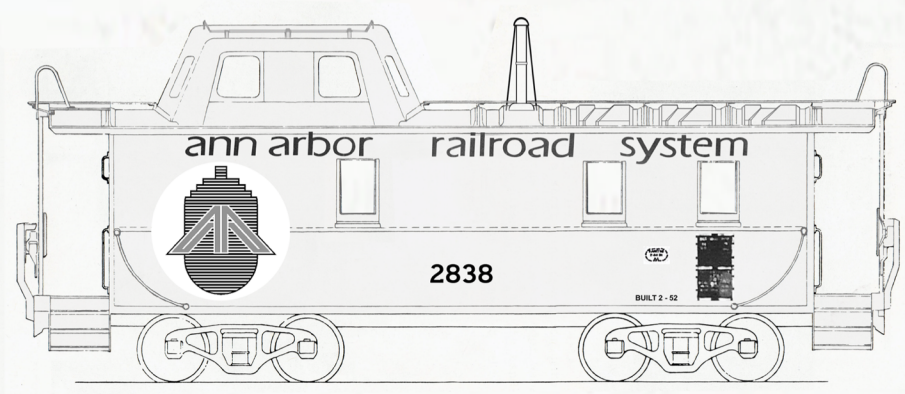

Photo of AA 2838 at Owosso Shop dated July 1979 - only caboose known to use the Gothic font number
Later repaints (most cabooses) had “ann arbor” spaced closely together



2841
Boat Landing

2837
Ottawa Yard, Toledo Ohio
August 1983





2831, 2838
Owosso Shop, July 1979

note different number fonts

RS-2 301
2845, 2839, 2835
Owosso Yard



ANN ARBOR RAILROAD caboose paint schemes
DT&I ownership 1

Circa 1968 six AA cabooses were transfered to DT&I ownership

M&LS 8 (AA 2830) became DTI 121
AA 2833 became DTI 125
AA 2836 became DTI 122
AA 2840 became DTI 123
AA 2842 became DTI 124
AA 2844 became DTI 120

At first, they operated in their AA paint schemes. Pennant heralds were “scrubbed off”
“AA” added above the number on the side / “AA” and the number added above the end doors

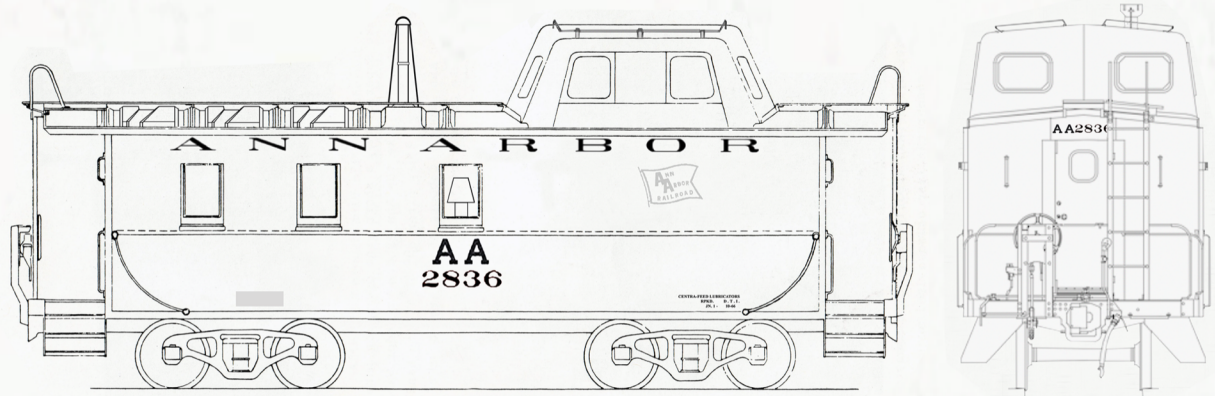

L.G.Isaac collection photo of AA 2836 on DT&I at Springfield Ohio

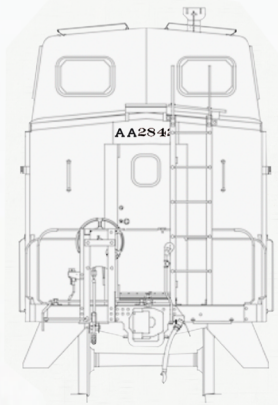

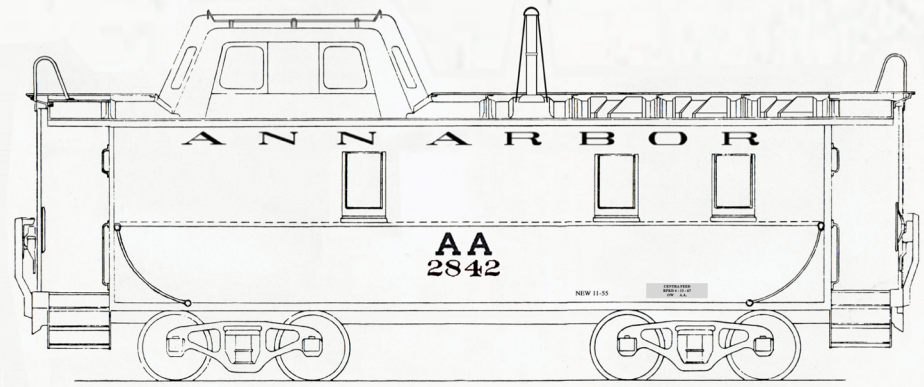

L.G.Isaac collection photo of AA 2842 on DT&I at Springfield Ohio dated Sept. 1968



2836
Springfield Ohio
L G Issac collection

2842
Springfield Ohio
L G Issac collection



ANN ARBOR RAILROAD caboose paint schemes
DT&I ownership 2

DTI 120 (built International Car Co 1955 as AA 2844)

As far as is known, this was the only DTI caboose to have this scheme that included the *"CONNECTIONS"* slogan.
This might be because AA 2844 was damaged in a derailment at Farwell* and had be repaired when tranferred to the DT&I.

Red: body (including corner posts) and cupola
Yellow: ends of body, end ladders (including top grabs), curved side railings
Black: steps, end platforms, all end railings and grab irons, ladder rungs and trim strip at the top of the body (including below the cupola and over end platforms)
Silver (aluminum): roof, running board (note: cupola roof is red)
36 - inch diameter compass herald with *"We have the CONNECTIONS"* slogan
3 - inch white stripe
Safety slogan in yellow with no box around it
"DTI 120" in black over end doors

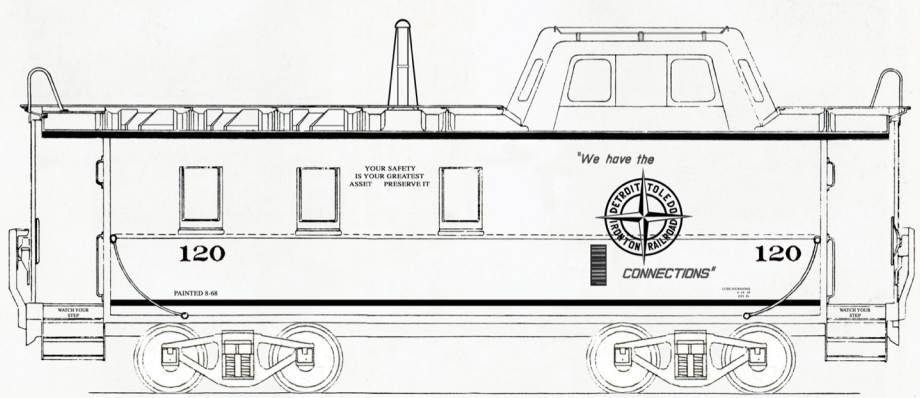

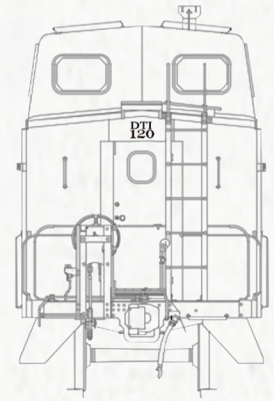

John Nixon photo of DTI 120 at Adrian, Michigan dated Sept. 1970

*Following its derailment AA 2844 was placed on 50-ton freight trucks. When it first became DTI 120 it retained these trucks.
Photos show that the trucks on DTI 120 were replaced with Barber-Bettendorf Swing Motion caboose trucks later on.





both photos

DTI 120 (ex AA 2844)

Adrian Michigan, September 1970

John Nixon photos

ANN ARBOR RAILROAD caboose paint schemes
DT&I ownership 3

The most common DT&I paint scheme

Red: sides of body and cupola
Yellow: ends of body, end ladders (including top grabs), curved side railings
Black: roof, steps, end platforms, all end railings and grab irons, ladder (note: cupola roof is red)
36 - inch diameter compass herald
3 - inch white stripe
Safety slogan in yellow (there were variations in size of box and placement of lettering)
"DTI" and number in black over end doors

The DT&I began to modify the cabooses. One window was plated over on each side. A vent was added to the right side where the window had been. The end doors were replaced with ones that had a 2-pane rectangular window. A water fill was added to the front (A-end) of the body. A "firecracker type radio antenna was added to the cupola roof on most of these cabooses.

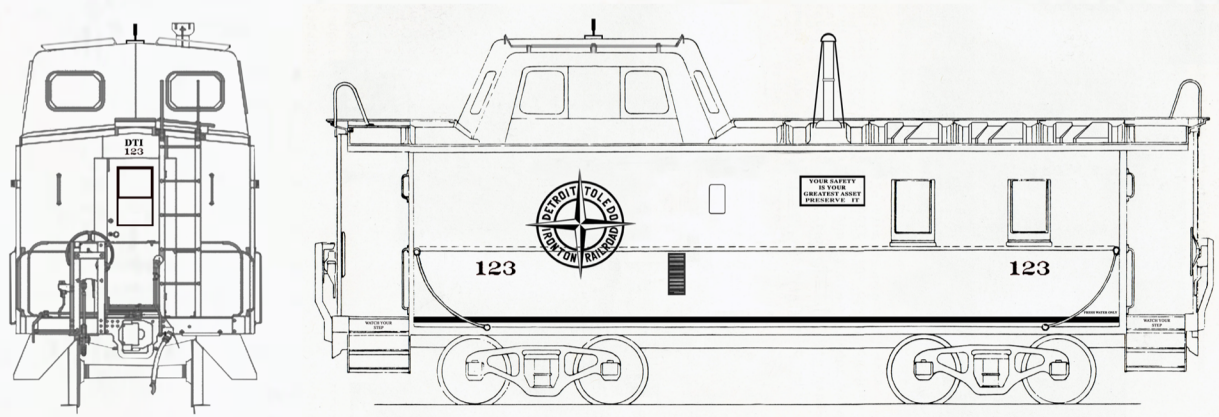

Photo of DTI 123 at Flat Rock dated March 1973
The side windows have been plated over and the end doors replaced.
Note that the corner posts where the sides meet the ends are painted red like the body.

ANN ARBOR RAILROAD caboose paint schemes
DT&I ownership 3

The most common DT&I paint scheme

On the right side of DTI 121 the window modification was different. The middle window was plated over instead of the one below the cupola. It received the new (2-pane window) end doors and the water fill on the A-end like the other ex-AA cabooses.

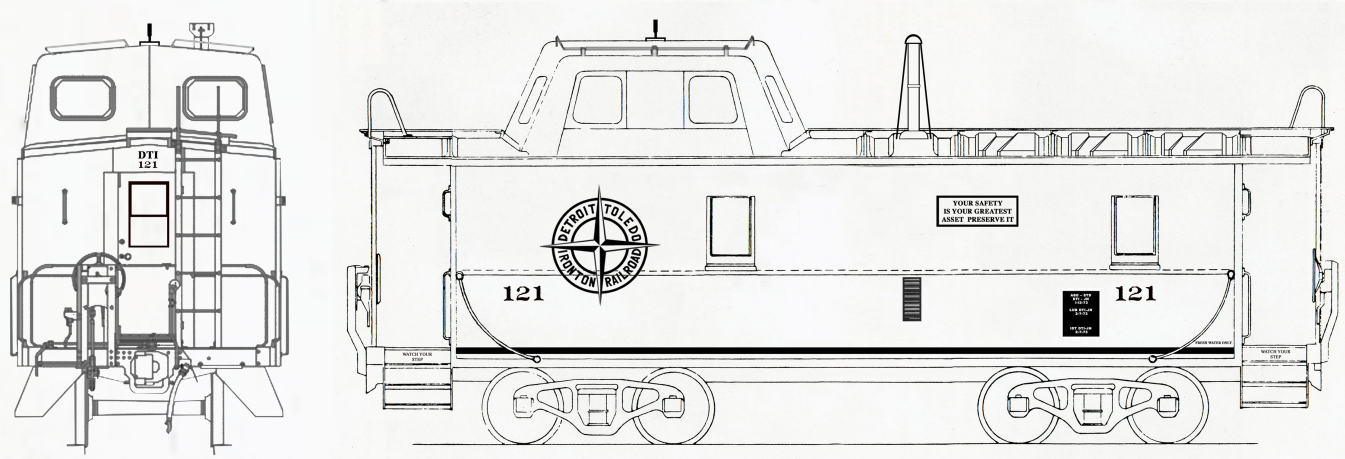

Jim Sinclair photo of DTI 121 at Diann Tower, February 1973

At a later date this caboose had the window under the cupola plated over and the vent added like the other cabooses. As a result DTI 121 had only one window on the right side. A photo of it out-of-service at Port Huron (and wearing the large version of the “star” herald) shows these modifications.

ANN ARBOR RAILROAD caboose paint schemes

DT&I ownership 3

The most common DT&I paint scheme

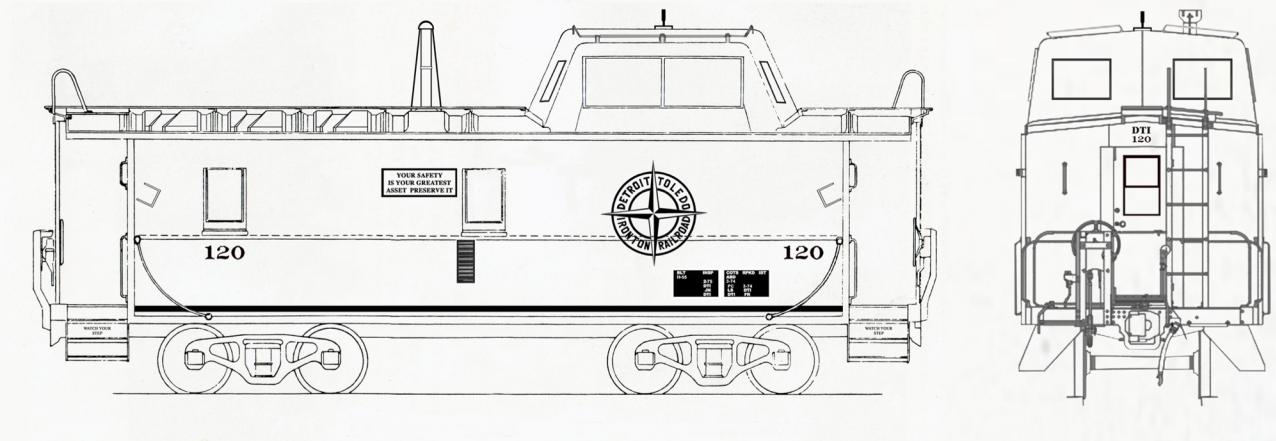

A later photo of DTI 120 at Flat Rock*

The original cupola windows were prone to leaking so at some point the side and end cupola windows were replaced as shown here. All of the ex-AA cabooses (except DTI 125) eventually had all the cupola windows replaced

Also the cabooses were equipped with metal paddle-type makers and brackets added to the sides for storing them when not in use. Note that the corner posts where the sides meet the ends are now painted yellow like the ends. While the end ladders are still yellow, it was common for the ladder rungs to be painted black. Some of the cabooses evenually had the roof running boards removed and the uppermost two ladder rungs removed.

At least two of the cabooses (120, 123) had the upper section of the smokejack replaced at some point.

*By this time DTI 120 had its freight trucks replaced with standard Barber Swing Motion caboose trucks.



DTI 120
(ex AA 2844)

original cupola
windows

DTI 123
(ex AA 2840)

cupola windows
replaced
roof running boards
removed
smokejack replaced





DTI 121
(ex M&LS 8 nee AA 2844)
Diann Tower, February 1973
Jim Sinclair photo

DTI 121
stored on GTW at
Port Huron

Note the window under the
cupola has been plated over



ANN ARBOR RAILROAD caboose paint schemes
DT&I ownership 4

The DT&I adopted the “star herald” in the late 1970’s which began to replace compass heralds on equipment

The paint scheme remained the same as cabooses having the compass heralds except the corner posts were painted yellow like the ends instead of red
Star herald: larger version applied to DTI 121 in 1979 - smaller one applied to DTI 125 in 1980
Safety slogan: black for DTI 121 and yellow for DTI 125
Ends had “DTI” and number along with “A-END” or “B-END” in black above door
Yellow “Wheel Inspection Dot” at lower right corner of body

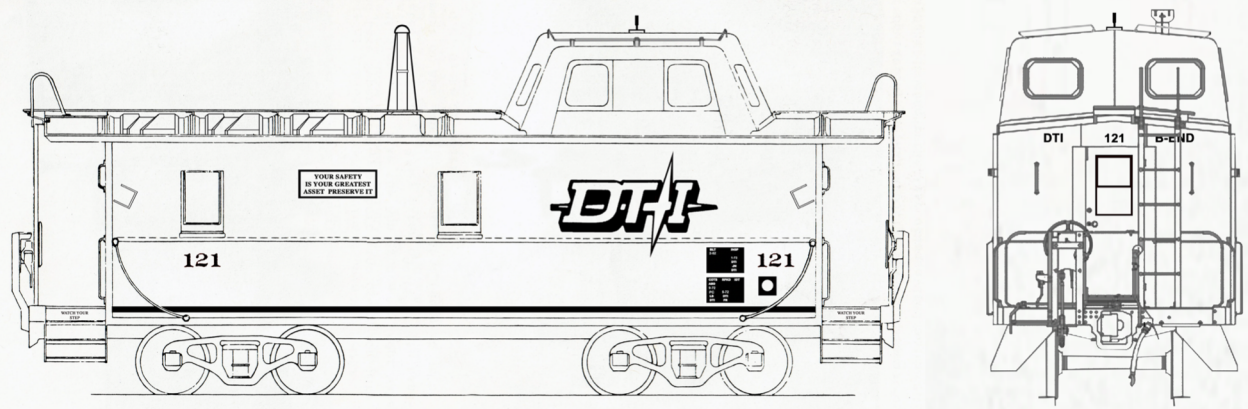

Photo of AA DTI 121 at Diann circa 1980

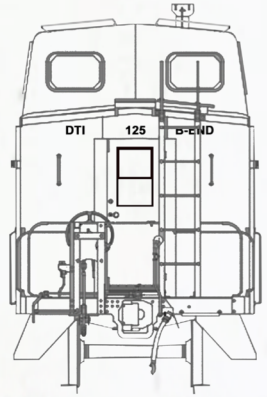

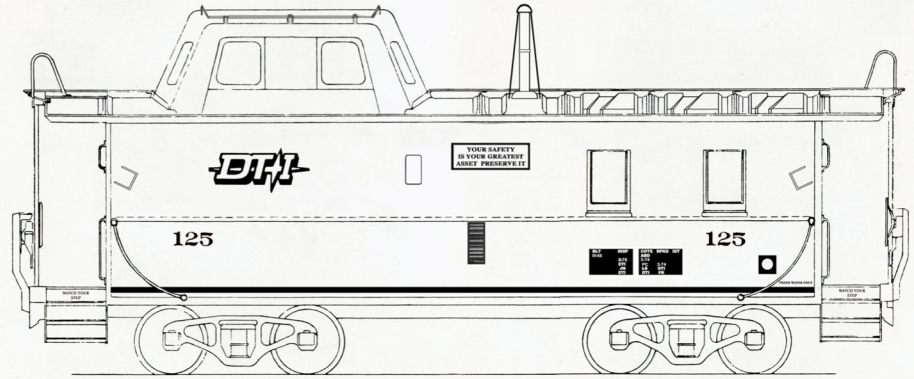

Photo of DTI 125 at Maybee Michigan dated August 1984



DTI 121
(exM&LS 8 neeAA 2830)
Diann Michigan, circa 1980

DTI 125
(exAA 2833)
Maybee Michigan,
August 1984



ANN ARBOR RAILROAD caboose paint schemes
DT&I ownership 5

After Grand Trunk Western took over control of the DT&I, caboose DTI 122 was repainted into this version of the GTW orange scheme in 1981

Orange: body, cupola, ends, steps and end platforms
Black: roof (note: cupola roof is orange)
White: all lettering, all grab irons and outer portion of end platform railings, ladder rungs
Safety slogan: white

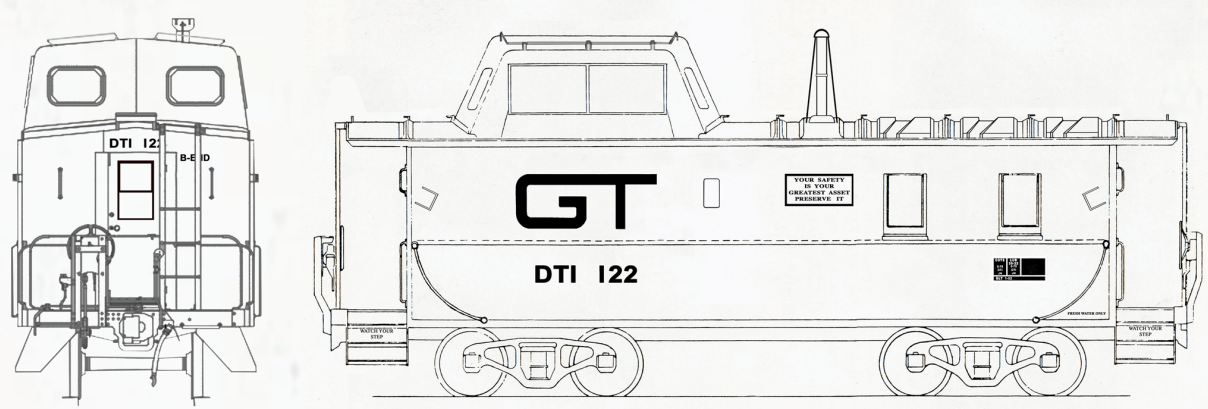

Photo of DTI 122 at Port Huron dated April 1989



DTI 122
(exAA 2836)

Port Huron Michigan
April 1989



MANISTIQUE & LAKE SUPERIOR 8

Built Wabash RR as AA 2830 in 1952
transferred to M&LS 1959

Red: sides, ends, end platform and steps, ladders and cupola
Yellow: side and end grab irons, outer portion of end railings
Silver (aluminum): roof, running board (note: cupola roof is red)

AA lettering and pennant herald painted over then M&LS lettering added

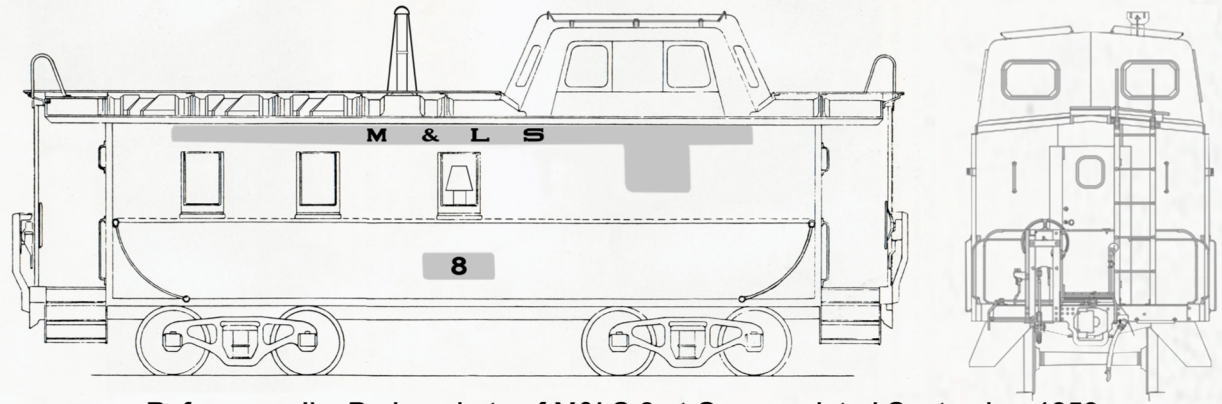

Reference: Jim Parker photo of M&LS 8 at Owosso dated September 1959

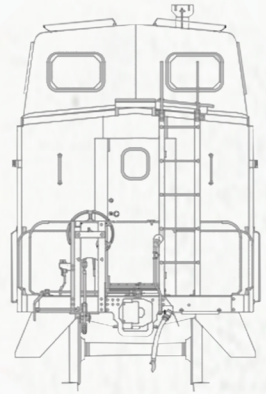

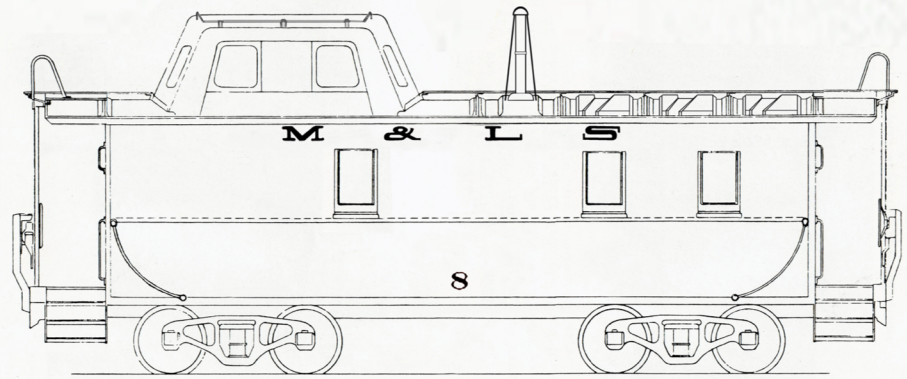

M&LS 8 completely repainted at Manistique - Note: different lettering font
Reference: Eddie Gross collection photo at Manistique dated September 1965



M&LS 8 (AA 2830)
Owosso Yard, September 1959
Jim Parker photo

M&LS 8
Manistique Michigan, September 1965
Eddie Gross collection



ANN ARBOR RAILROAD caboose paint schemes

Michigan Artrain Cab 5

(built International Car Co 1955 as AA 2843)

Circa 1980, AA 2843 was donated to the Michigan Artrain to replace a former New York Central (Big Four) wood caboose that had been used since the Artrain was formed in 1971. As Art Cab 5 it served through the 1980's until it was finally retired and replaced by ex-DTI 141. The Artrain cars were periodically repainted to reflect the theme of the traveling art exhibit. This was the most common paint scheme worn by the ex-AA caboose.

Red: body, ends and cupola
Black: steps, end platforms, all side and end railings and grab irons

The three bars on the sides: black
'ARTRAIN' and Art Cab 5 lettering: white

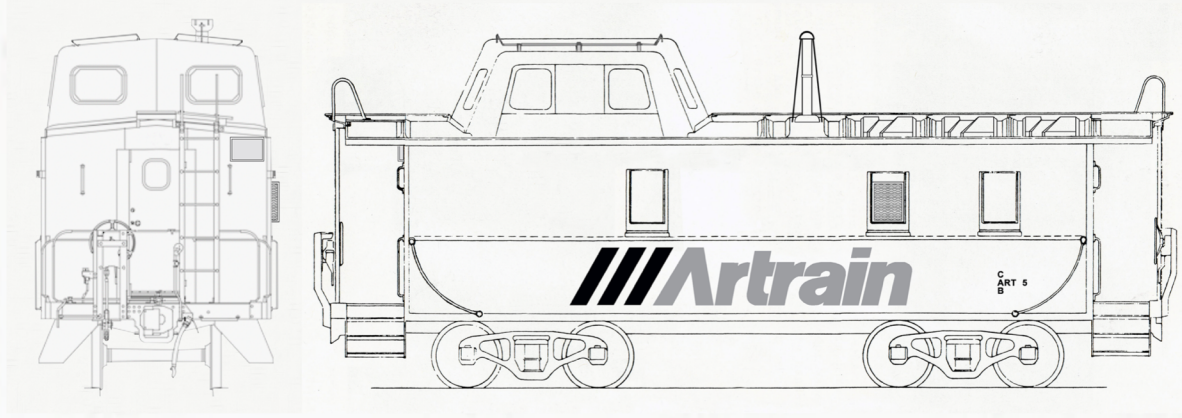

Con Sweet photo of Art Cab 5 at Austin Texas, 1986

The caboose was not part of the art exhibits but provided accomodations for the crew that traveled with the Artrain. Note the window air conditioner installed on the right side and the left side had two small louvered vents installed in the side.



Artrain Art Cab 5
(AA 2843)
Ausin Texas, 1986
Con Sweet photo





May 1966 at the Owosso Yard

The transition from Wabash Railroad control to the
Detroit Toledo & Ironton is evident on the Ann Arbor caboose fleet.
Caboose 2846 and one other wear the AA version of the DT&I's compass herald
while caboose 2831 and the Alco RS-1 still fly the pennant from the Wabash era.